**PROPRIETARY AND CONFIDENTIAL**
THE INFORMATION CONTAINED IN THIS DRAWING IS THE SOLE PROPERTY OF ADTLINK ANY
REPRODUCTION IN PART OR AS A WHOLE WITHOUT THE WRITTEN PERMISSION OF ADTLINK IS PROHIBITED

| 版本 REV | 变更内容 DESCRIPTION | 变更号 ECN No. | 日期 DATA |
|---|---|---|---|
| 1.0 | ISSUE | REL | 2024.Sep.09 |

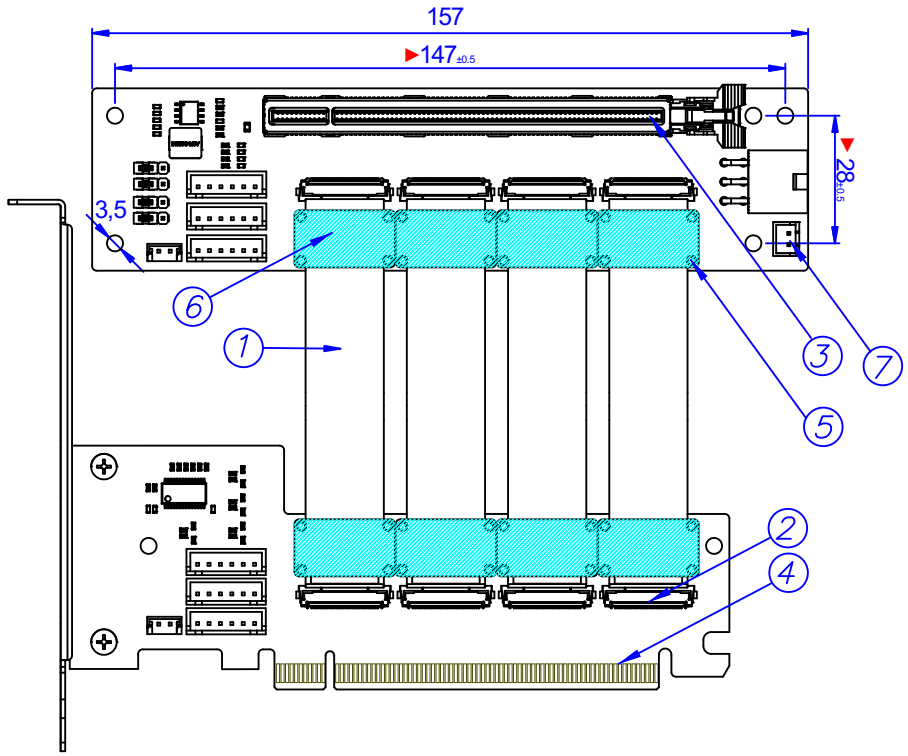


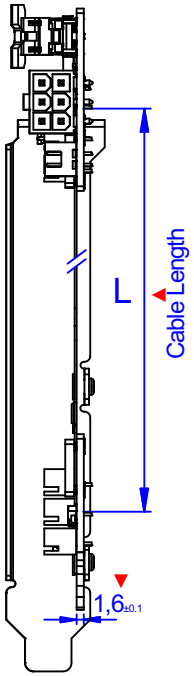


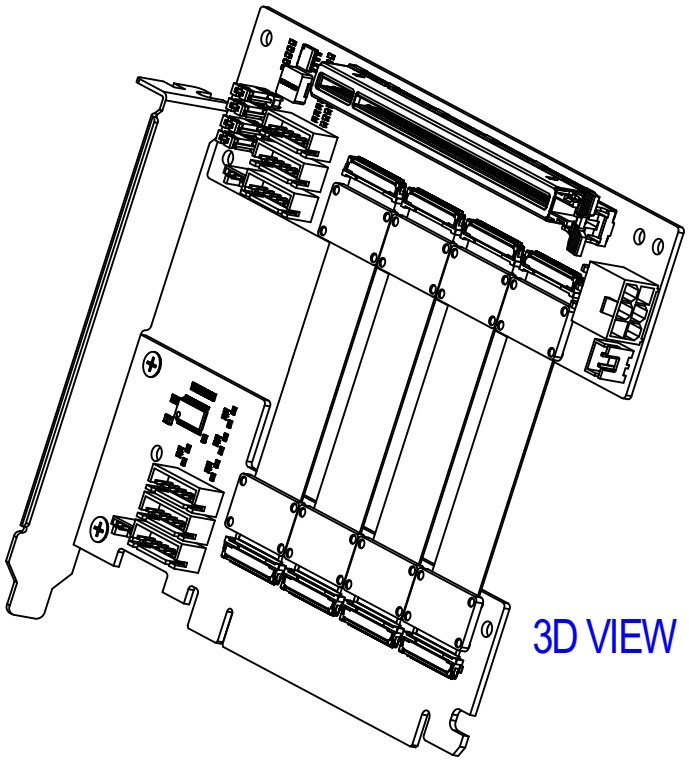


FEATURES:
PCIE x16 extension riser cable
Specification: PCIE x16 164p

PHYSICAL PROPERTIES:
Operation Temp.Range: -40°C to 85°C
PAIR Cable Flammability rating：non (customize for VW-1)

ELECTRONIC CHARACTERISTICS:
1. CABLE IMPEDANCE: 90Ω±10%
2. DC Current Rating: PER PIN 0.5A
3. Voltage Rating: 30V
4. Durability: 10 Cycles
5. 導體規格:厚度0.05mm 寬度0.3mm鍍銀
6. FPC CONNECTOR I-PEX 20535-030E-02
7. 補強板內貼

NOTE
1.100% OPEN/SHORT TEST.
2.DIMSION MARK "▼" BY QC CHECK

| Part-Number | Length (mm) |
|---|---|
| F3312A-50CM | 500±20 |
| F3312A-25CM | 250±10 |

| No. | PART NO. | DESCRIPTION | Q'TY |
|---|---|---|---|
| 7 | Connector | 2P 2.5mm Pitch CONNECTOR | 1Pcs |
| 6 | PAD | Aluminum 1.5mm PAD | 8Pcs |
| 5 | Screw | M2 screw | 32Pcs |
| 4 | Edge PCB | PCIe X16 CARD EDGE PCB, Black,ON GOLD FINGER, UL 94V-0 | 1Pcs |
| 3 | Connector | PCIe Gen 5, X16, with Shell,SMT,Black,HF | 1Pcs |
| 2 | Connector | Auto-locking,high-speed, horizontal mate, 0.5 mm pitch shielded FFC/FPC connector | 8Pcs |
| 1 | CABLE | 17.15*0.5mm 30PIN FFC CABLE,Thickness 0.05mm width 0.3mm silver plated,DIFF 90Ω±10% Ohm | 4Pcs |

**ADT-Link**

TITLE: PCIE x16 Extension Flat CABLE

DWG NO.: ADT-F3312A-001
CUSTOMER NO.: F3312A-xxxcm
CUSTOMER P/N: F3312A

| SCALE | UNIT | CUS REV. | ADT REV. | DATE | SHEET |
|---|---|---|---|---|---|
| NONE | mm | 1.0 | 1.0 | 2024.Sep.09 | 1/1 |

DRAWING/制图: Dane
CHECKED/审核:
APPROVED/核准: